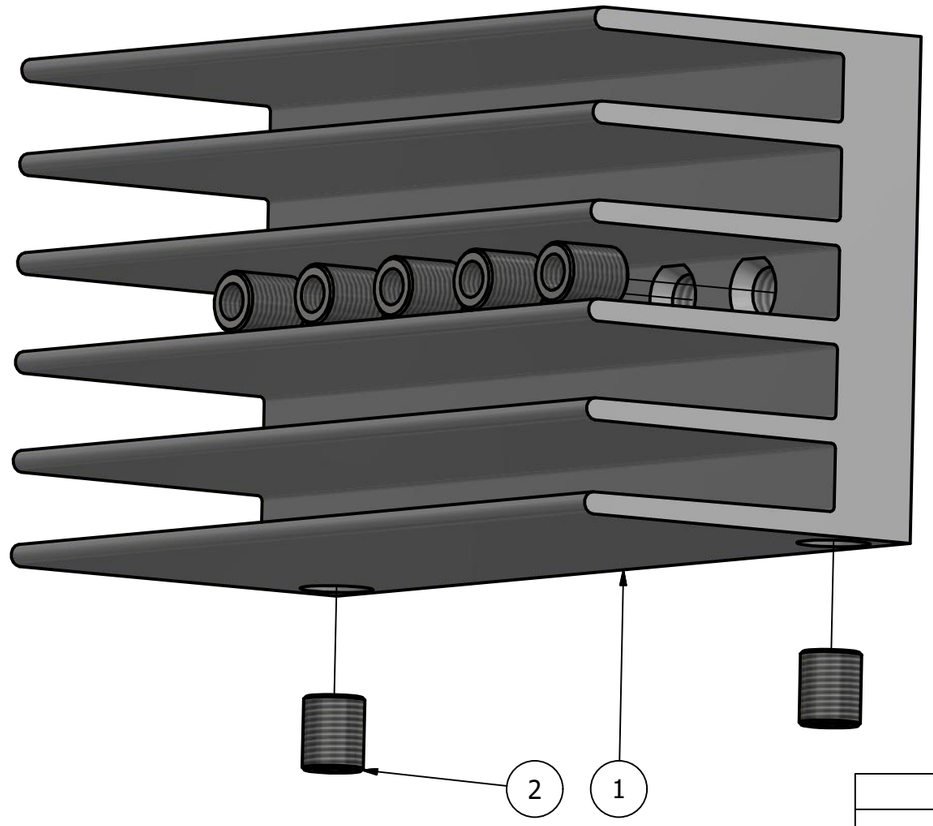

PARTS LIST			
ITEM	QTY	PART NUMBER	DESCRIPTION
1	1	HT100002270 Heatsink	Extruded heatsink FischerElektronik
2	7	FTI02M3 SS43	thread inserts with cutting slots https://shop.kvt-fastening.de/en/itemgroup/1041.html

DRAWN schmoelb	09.11.2018	Infineon Technologies Austria AG
CHECKED		TITLE
UNIT mm		HT100002270 Assembly
TOLERANCE +/- 10%	REV	
SIZE A3	SCALE 2 : 1	DWG NO HT100002270 Assembly
SHEET 1	OF 1	
PATH C:\Inventor SVN\P100002270\HT100002270\HT100002270 Assembly.idw		

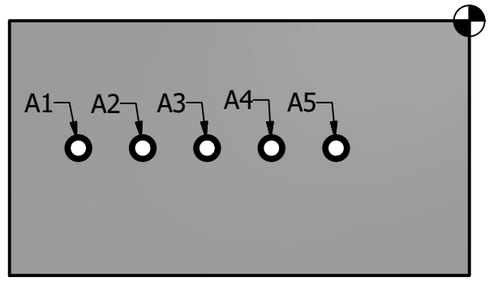

HOLE TABLE			
HOLE	XDIM	YDIM	DESCRIPTION
A1	-63.75	-20.75	Ø3.60 ↧ 8.00 ⌵ Ø 4.00 X 60.0°
A2	-53.25	-20.75	Ø3.60 ↧ 8.00 ⌵ Ø 4.00 X 60.0°
A3	-42.75	-20.75	Ø3.60 ↧ 8.00 ⌵ Ø 4.00 X 60.0°
A4	-32.25	-20.75	Ø3.60 ↧ 8.00 ⌵ Ø 4.00 X 60.0°
A5	-21.75	-20.75	Ø3.60 ↧ 8.00 ⌵ Ø 4.00 X 60.0°

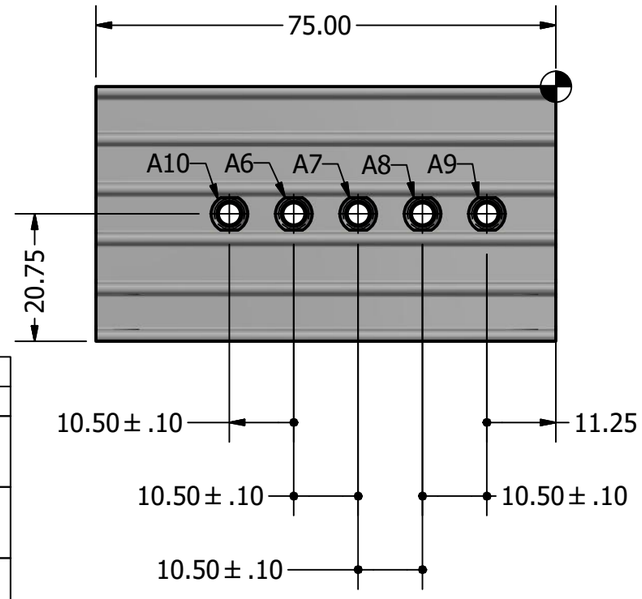

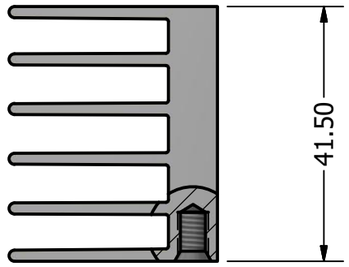

HOLE TABLE			
HOLE	XDIM	YDIM	DESCRIPTION
A9	-11.25	-20.75	M5x0.8 - 6H ↧ 6.00 ⌵ Ø6.00 X 60.0°
A8	-21.75	-20.75	M5x0.8 - 6H ↧ 6.00 ⌵ Ø6.00 X 60.0°
A7	-32.25	-20.75	M5x0.8 - 6H ↧ 6.00 ⌵ Ø6.00 X 60.0°
A6	-42.75	-20.75	M5x0.8 - 6H ↧ 6.00 ⌵ Ø6.00 X 60.0°
A10	-53.25	-20.75	M5x0.8 - 6H ↧ 6.00 ⌵ Ø6.00 X 60.0°

A9 - A12 Drill Diameter 4.7- 4.8mm

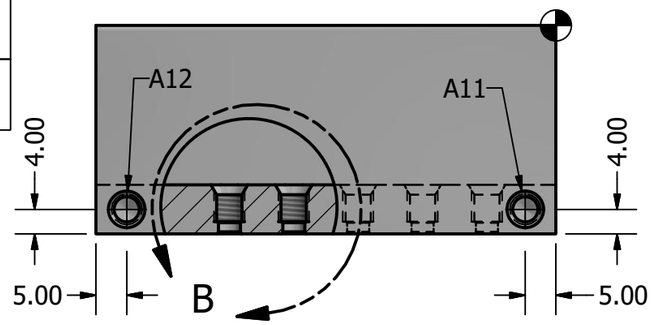

HOLE TABLE			
HOLE	XDIM	YDIM	DESCRIPTION
A11	-5.00	-30.00	M5x0.8 - 6H ↧ 8.00 ⌵ Ø6.00 X 60.0°
A12	-70.00	-30.00	M5x0.8 - 6H ↧ 8.00 ⌵ Ø6.00 X 60.0°

DETAIL B
SCALE 2 : 1

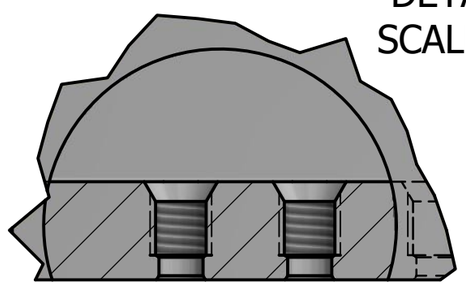

PARTS LIST			
ITEM	QTY	PART NUMBER	DESCRIPTION
1	1	SK 189 75 SA	Fischer Elektronik SK189 75mm

DRAWN schmoelb	07.11.2018	Infineon Technologies Austria AG
CHECKED		TITLE HT100002270
UNIT mm		
TOLERANCE +/- 10%	REV 1.0	
SIZE A3	SCALE 1 : 1	DWG NO HT100002270 Heatsink
SHEET 1	OF 1	
PATH	C:\Inventor SVN\P100002270\HT100002270\HT100002270.idw	